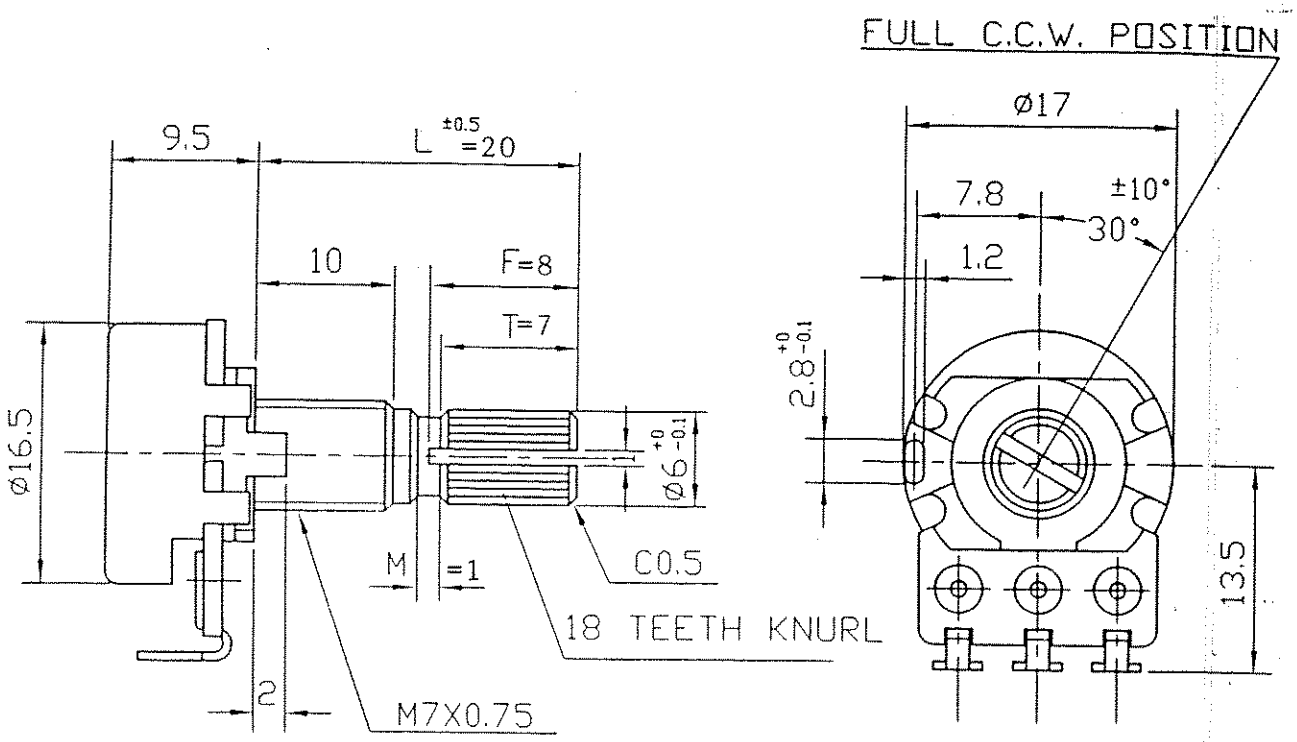

NUT 1 PC

WASHER 1 PC t=0.4

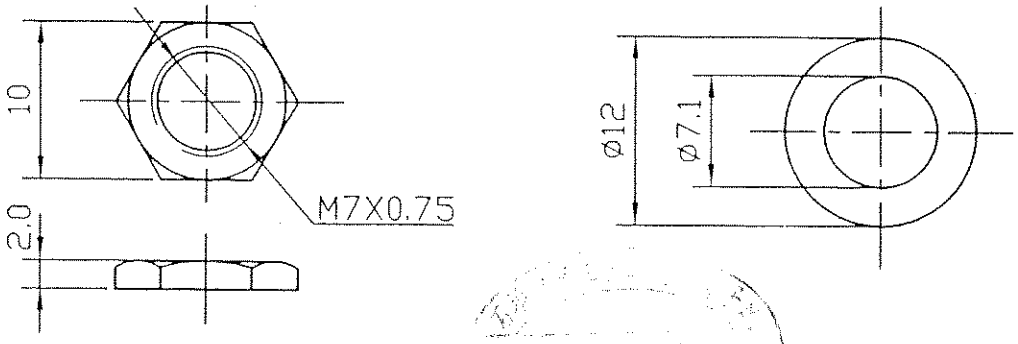

NOTE:
BUSHING MATERIAL IS ZINC ALLOY DIECASTING.

台灣大華電子工業股份有限公司 文管中心 94.2.21 發行

NO.	DATE	DESCRIPTION	MODEL NAME
			RV16AF-10B6-(L)K-XXX-(OC)

TOL. UNLESS OTHERWISE STATED	DIMENSION	SCALE	DRAWN BY	CHECKED BY	APPROVED BY	DRAWING NO.
less than 10 ±0.3 above 10 ~ 30 ±0.5 above 30 ~100 ±1.0 above ±5°	mm	2 1		正 94.2.14	吳 94.2.14 碧鋒	

TAIWAN ALPHA ELECTRONIC CO., LTD.